Fibre Composites Design and Development

Development of Plant Resins for Fibre Composite Applications

Professor Gerard Van Erp

Composites Institute of Australia Research Chair in Fibre Composites

Executive Director, Fibre Composites Design and Development

FCDD, a member of Australian Technology Showcase

Overview

- What are fibre composites
- Traditional applications
- New civil engineering applications
- USQ's fibre composite developments
- Development of Plant resins

WHAT ARE FIBRE COMPOSITES

Modern day fibre composites consist of polymers reinforced with carbon, glass and/or aramid fibres

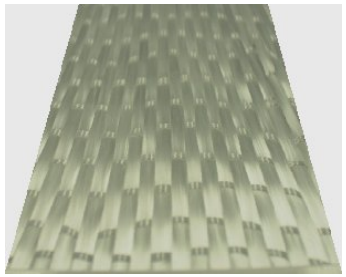

Glass

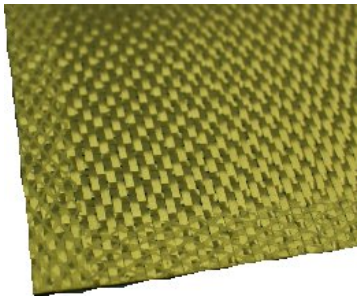

Aramid

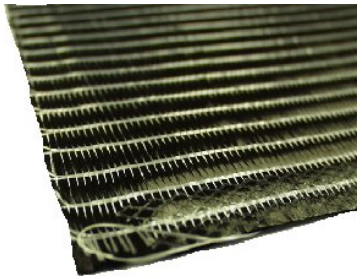

Carbon

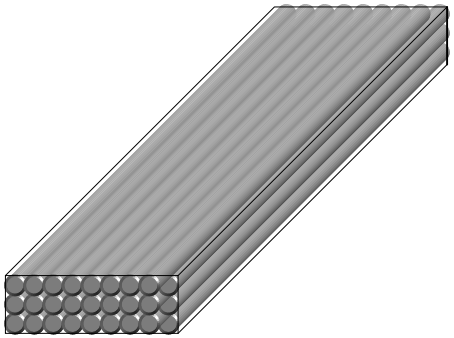

Lamina

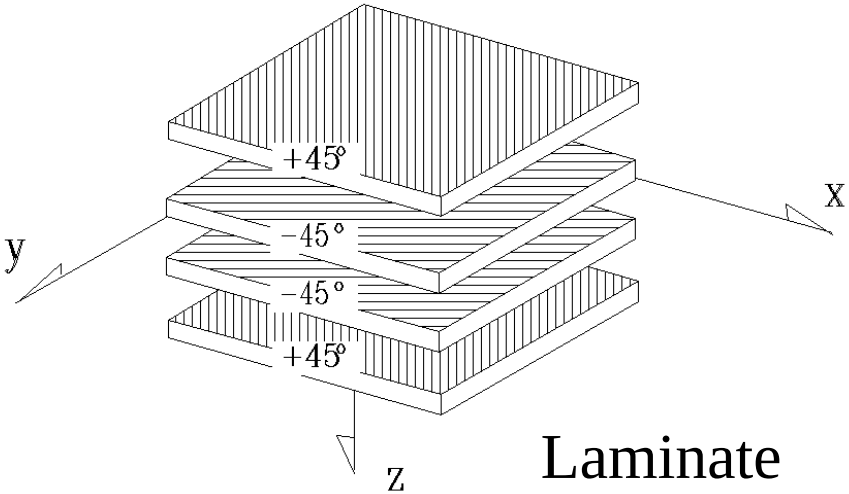

Laminate

WHY USE POLYMER COMPOSITES

Fibre Composites combine

- high strength
- low weight
- high corrosion resistance
- low thermal conductivity
- low electrical conductivity (glass)
- non magnetic properties
- radar transparency
- good attenuation of sound and vibration
- excellent design flexibility
- low life cycle costs

Traditional Fibre Composite Applications

Fibre Composites Design and Development

Aerospace Industry

Focus on
- weight reduction
- design flexibility
- radar transparency

Marine and Car Industry

- Weight reduction
- corrosion resistance
- design flexibility

Leisure Industry

- weight reduction
- vibration damping
- design and production flexibility

FCDD, a member of Australian Technology Showcase

Civil Engineering applications

- Most infrastructure in the developed world, including Australia, was built in the postwar era in the 1950s and 1960s.

- Most of this infrastructure has reached the end of its economic life and is in very poor condition due to wear, tear and increased traffic loads.

Global Infrastructure problems

- The IEAust has estimated that over the next 10 years more than $40 billion is required for the upgrade and maintenance of Australia's infrastructure.

- The USA, Europe and Japan are in a worse state due to the effects that de-icing salts have had over the years

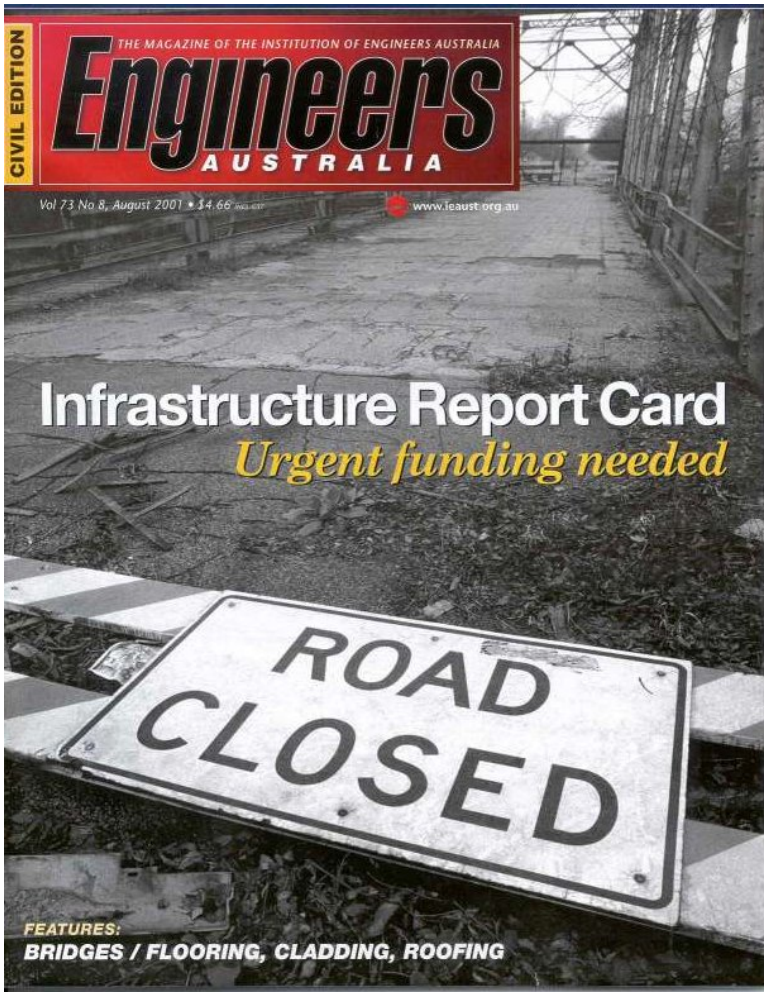

Global Infrastructure problems

The areas of most concern are

- Bridges
- Railway infrastructure
- Coastal and marine structures
- Sewerage systems

Global Infrastructure problems

Bridges

- The Australian Road Authorities have estimated that 20,000 bridges are in need of replacement or major upgrading (cost 5-8 billion)
- In USA 500,000 bridges need replacing (200 billion)
- Europe, Japan and India are in a similar position as the USA

Global Infrastructure problems

Bridges

This historic 1880s railway bridge at Wellington, NSW, is one of many railway bridges still operating on main lines in that state which are well past their design life.

Global infrastructure problems

Railway lines

- Maintenance of Australian railway lines requires in excess of 2.5 million timber sleepers per year (annual cost 150 million)
- USA , India and China have maintenance problems which are several magnitudes bigger
- India alone imports 7 million sleepers per year

Global Infrastructure Problems

- Most of the old infrastructure was built using hardwood (bridges, sleepers, piles etc).
- Hardwood is increasingly difficult to get and is no longer an acceptable solution.
- India has banned the use of timber as a construction material all together

Global Infrastructure Problems

- Concrete is heavy, difficult to transport and suffers from corrosion in a marine environment
- Steel requires a lot of maintenance due to corrosion problems
- Worldwide, engineers agree that advanced fibre composites (reinforced plastics) are the answer to many of the infrastructure problems.
- To date most fibre composite developments have suffered from the high cost of these new materials

Global Infrastructure problems

- USQ's composites technology is one of the first in the world that is cost competitive with traditional solutions.

Other USQ composite projects

Power poles

Hardwood substitution bridge beams

Railway sleepers

Other USQ composite projects

Fender piles

Composite piles

Marine Dolphins

Sheet piles

Fibre Composites Design and Development

Market volume

Commercialisation of USQ's developments alone is predicted to use approximately 7000 tonne of resin during the next five years

Australia wide this volume is 4-5 times as big

Fibre Composites Design and Development

Use of plant oil derivatives in fibre composites applications

Current resin technology in fibre composites

Most common resins:

polyester, vinylester, epoxy

Almost all resins used in Australia are sourced from overseas

All resins are currently made from non renewable petrochemicals

USQ has started a research project to develop technology to enable the production in Australia of environmentally sustainable polymer resins from plant oils

Oil chemistry

- All oils consist of triglycerides:

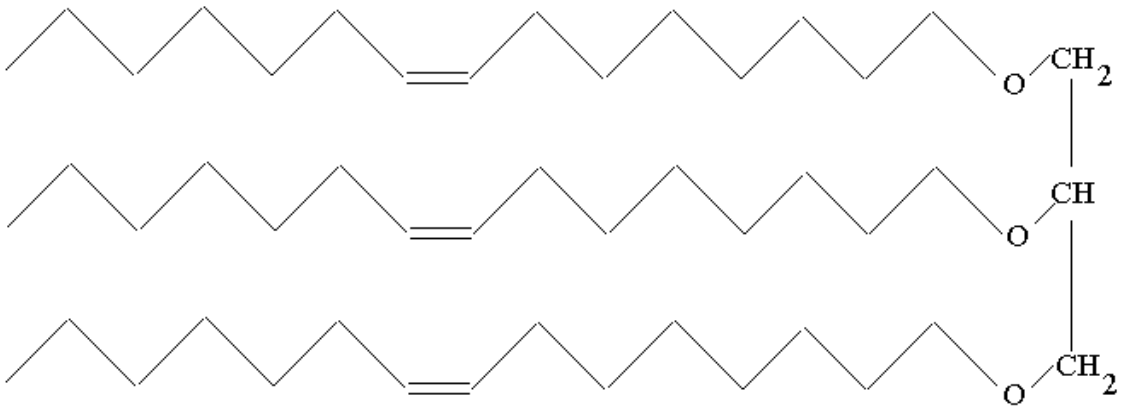

- Resin production involves conversion of unsaturated groups to functional groups

Functionalisation of oils

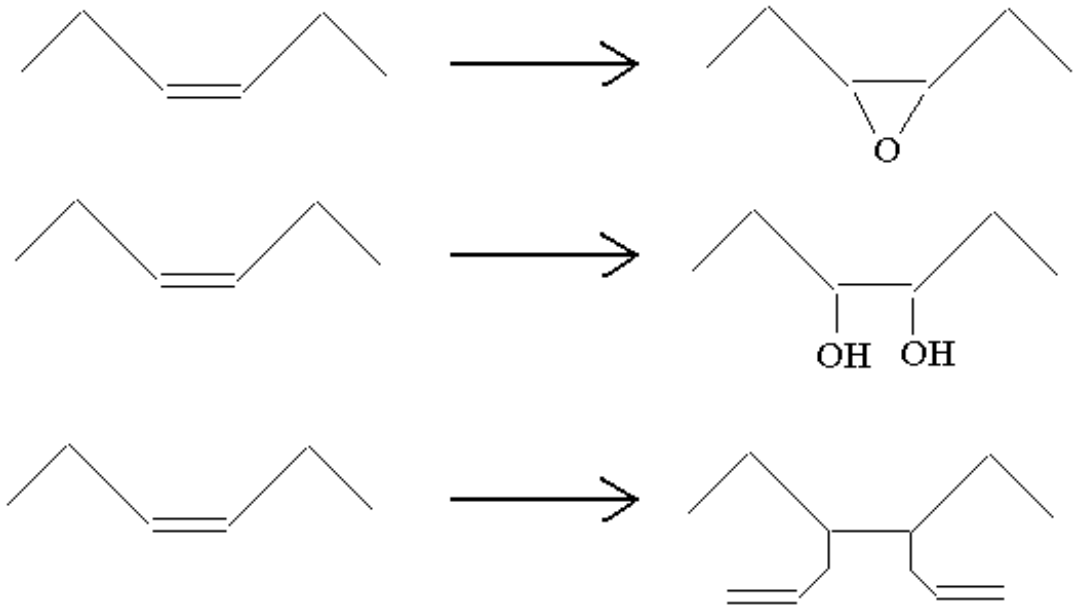

epoxidation

hydroxylation

acrylation

➢The higher the functionalisation, the higher the crosslink density and mechanical properties of the resin

Approximate Fatty acid composition of oils

Oil	% 16:0	% 18:0	% 18:1	% 18:2	% 18:3
Soybean	9	6	26	50	7
Sunflower	-	12	23	65	-
Cottonseed	-	25	21	50	-
Canola	-	7	54	30	7
Linseed	5	4	19	14	58

Project Aims

- To develop new polymer technology and products utilizing plant oil products as either modifiers to existing resins and adhesives, or as the basis of new resins and adhesive products

- To diffuse this technology with the aim of establishing Australia a major production hub for sustainable composite materials

Overseas work in this field

- United Soy board in USA has generously supported research into all uses of their crops, including resin research
- Germany and France have actively pursued the use of sunflower oil in polyurethane production
- Outcomes to date:
  - 2 companies: soyoyl (www.soyoyl.com) and cara plastics set up in past 4 years. Soyoyl uses hundreds of thousands of bushels of soybeans annually, projected to increase several fold in the next decade
  - panels based on soy resin produced and used in usa and europe

Current application of plant oil resins

- Panels for John deere farm machinery from resin injection moulded "harvest Form " resin

Summary

- Civil engineering is a large market for fibre composites
- Commercialisation of USQ's developments are predicted to use approximately 7000 tonne of resin during the next five years
- The development of sustainable resins from plant oils is advancing rapidly overseas
- For Australia to participate urgent research funding is required
- To date USQ has allocated $100,000 for this research work